Franklin Electric Co., Inc.
P. O. Box 12010
Oklahoma City, OK 73157-2010
405.947.2511 • Fax: 405.947.8720
www.LittleGiantPump.com
CustomerService-WTS@fele.com

9EN/9SN/10SN SERIES
INSTALLATION MANUAL

EN ENGLISH

This instruction sheet provides you with the information required to safely own and operate your Little Giant product. Retain these instructions for future reference.

Before installation, read the instructions carefully. Each Little Giant pump is of the highest quality workmanship and material and has been engineered to give you long and reliable service. This product has been carefully tested, inspected, and packaged to ensure safe delivery and operation. Please examine your item(s) carefully to ensure that no damage occurred during shipment. If damage has occurred, please contact the place of purchase and they will assist you in replacement or repair, if required.

MODELS

Item	Model	Voltage	HP	Amps	Discharge (FNPT)	Solids Handling (In.)	Cord Length (Ft)	Manual / Automatic
509203	9SN-CIM	115	4/10	8.5	2	2	20	Manual
509204	9SN-CIA-RF	115	4/10	8.5	2	2	20	Remote Float
509207	9EN-CIM	115	4/10	9	1-1/2	3/4	20	Manual
509208	9EN-CIM	115	4/10	9	1-1/2	3/4	30	Manual
509209	9EN-CIA-RF	115	4/10	9	1-1/2	3/4	20	Remote Float
509210	9EN-CIA-RF	115	4/10	9	1-1/2	3/4	30	Remote Float
509215	9SN-CIA-RF	115	4/10	8.5	3	2	20	Remote Float
509226	9SN-CIM	115	4/10	8.5	3	2	20	Manual
509228	9SN-CIA-SFS	115	4/10	8.5	2	2	20	Snap-Action Float
509260	9EN-CIA-SFS	115	4/10	9	1-1/2	3/4	20	Snap-Action Float
509261	9EN-CIA-SFS	115	4/10	9	1-1/2	3/4	30	Snap-Action Float
511322	10SN-CIM	115	1/2	9.5	2	2	20	Manual
511323	10SN-CIA-RF	115	1/2	9.5	2	2	20	Remote Float
511326	10SN-CIA-RF	115	1/2	9.5	3	2	20	Remote Float
511344	10SN-CIM	115	1/2	9.5	3	2	20	Manual
511346	10SN-CIA-SFS	115	1/2	9.5	2	2	20	Snap-Action Float

⚠ WARNING ⚠

WARNING: RISK OF ELECTRIC SHOCK! This pump is supplied with a grounding conductor and/or grounding-type attachment plug. To reduce the risk of electric shock, be certain that it is connected to a properly grounded grounding-type receptacle.

Your 115 V pump is equipped with a 3-prong electrical plug. The third prong is to ground the pump to prevent possible electrical shock hazard. Do not remove the third prong from the plug. A separate branch circuit is recommended. Do not use an extension cord.

When a pump is in a basin, etc., do not touch motor, pipes or water until unit is unplugged or shut off. If your installation has water or moisture present, do not touch wet area until all power has been turned off. If shut-off box is not accessible, call the electric company to shut off service to the house, or call your local fire department for instructions. Failure to follow this warning can result in fatal electrical shock.

The flexible PVC jacketed cord assembly mounted to the pump must not be modified in any way, with the exception of shortening the cord to fit into a control panel. Any splice between the pump and the control panel must be made within a junction box and mounted outside of the basin and comply with the National Electrical Code. DO NOT use the power cord for lifting the pump.

The pump motor is equipped with an automatic resetting thermal protector and may restart unexpectedly. Protector tripping is an indication of motor overloading as a result of operating the pump at low heads (low discharge restriction), excessively high or low voltage, inadequate wiring, incorrect motor connections, or a defective motor or pump.

1. Read all instructions and safety guidelines thoroughly. Failure to follow the guidelines and the instructions could result in serious bodily injury and/or property damage.
2. DO NOT USE TO PUMP FLAMMABLE OR EXPLOSIVE FLUIDS SUCH AS GASOLINE, FUEL OIL, KEROSENE, ETC. DO NOT USE IN EXPLOSIVE ATMOSHPHERES OR HAZARDOUS LOCATIONS AS CLASSIFIED BY NEC, ANSI/NFPA70. FAILURE TO FOLLOW THIS WARNING CAN RESULT IN PERSONAL INJURY AND/OR PROPERTY DAMAGE.
3. During normal operation the pump is immersed in water. Also, during rain storms, water may be present in the surrounding area of the pump. Caution must be used to prevent bodily injury when working near the pump:
   a. The plug must be removed from the receptacle prior to touching, servicing, or repairing the pump.
   b. To minimize possible fatal electrical shock hazard, extreme care should be used when changing the fuses. Do not stand in water while changing fuses or insert your finger into the fuse socket.
4. Do not run the pump in a dry basin. If the pump is run in a dry basin, the surface temperature of the pump will rise to a high level. This high level could cause skin burns if the pump is touched and will cause serious damage to your pump.
5. Do not oil the motor. The pump housing is sealed. High grade dielectric oil devoid of water has been put into the motor housing at the factory. Use of other oil could cause serious electric shock and/or permanent damage to the pump.
6. This pump's motor housing is filled with a dielectric lubricant at the factory for optimum motor heat transfer and lifetime lubrication of the bearings. Use of any other lubricant could cause damage and void the warranty. This lubricant is non-toxic; however, if it escapes the motor housing it should be removed from the surface quickly by placing newspapers or other absorbent material on the water surface to soak it up, so aquatic life is undisturbed.
7. In any installation where property damage and/or personal injury might result from an inoperative or leaking pump due to power outages, discharge line blockage, or any other reason, a backup system(s) and/or alarm should be used.

BASIN

Pump must be installed in a suitable gas-tight basin which is at least 18" in diameter and 24" deep. It must be sealed and vented to meet local, state, and federal plumbing codes. Pump must be placed on a hard level surface. Never place pump directly on clay, earth, or gravel surfaces. A check valve must be used in the discharge line to prevent back flow of liquid into the basin. The check valve should be a free flow valve that will easily pass solids.

Caution: For best performance of check valves, when handling solids install in a horizontal position or at no more than at a 45° angle. Do not install check valve in a vertical position as solids may settle in valve and prevent opening on start-up.

When a check valve is used, drill a 3/16" hole in the discharge pipe approximately 1" to 2" above the pump discharge and below the check valve to prevent air locking of the pump.

WIRING

Check local electrical and building codes before installation. The installation must be in accordance with their regulations as well as the most recent National Electrical Code (NEC). To conform to the NEC, all pumps must be wired with 14 AWG or larger wire. For runs to 250', 14 AWG wire is sufficient. For longer runs consult a qualified electrician or the factory. Pump should be connected or wired to its own circuit with no other outlets or equipment in the circuit line. Fuses and circuit breaker should be of ample capacity in the electrical circuit.

REMOTE FLOAT SWITCH LEVEL CONTROL

The RF series pumps are equipped with a remote float switch level control. For automatic operation, the pump must be plugged or wired into this remote float switch. Pump will run continuously if plugged directly into an electrical outlet. When the level rises in the basin, the cylinder floats up with the level. When the cylinder position is at an angle of about 45°, the switch activates and starts the pump motor. As the level draws down, the cylinder floats down and when it is again at an angle of about 45°, the switch deactivates and the pump motor stops.

NOTE: Be certain pump is secure in basin and cylinder floats UNOBSTRUCTED without touching the basin walls or plumbing. A minimum tether length of 3.5" is required.

9SN Automatic Typical Installation

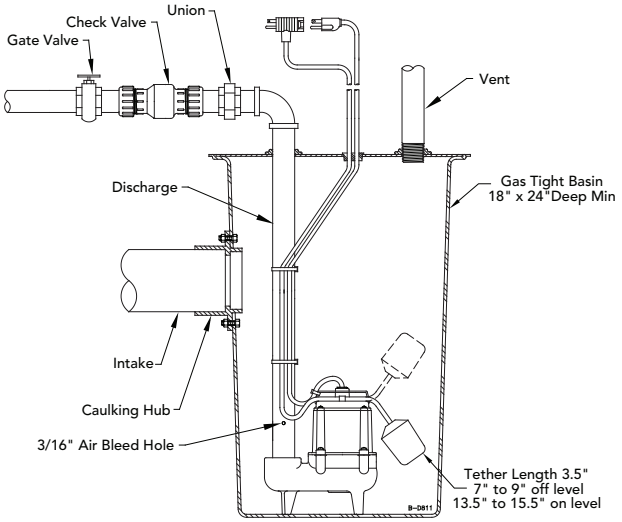

REPLACEMENT PARTS

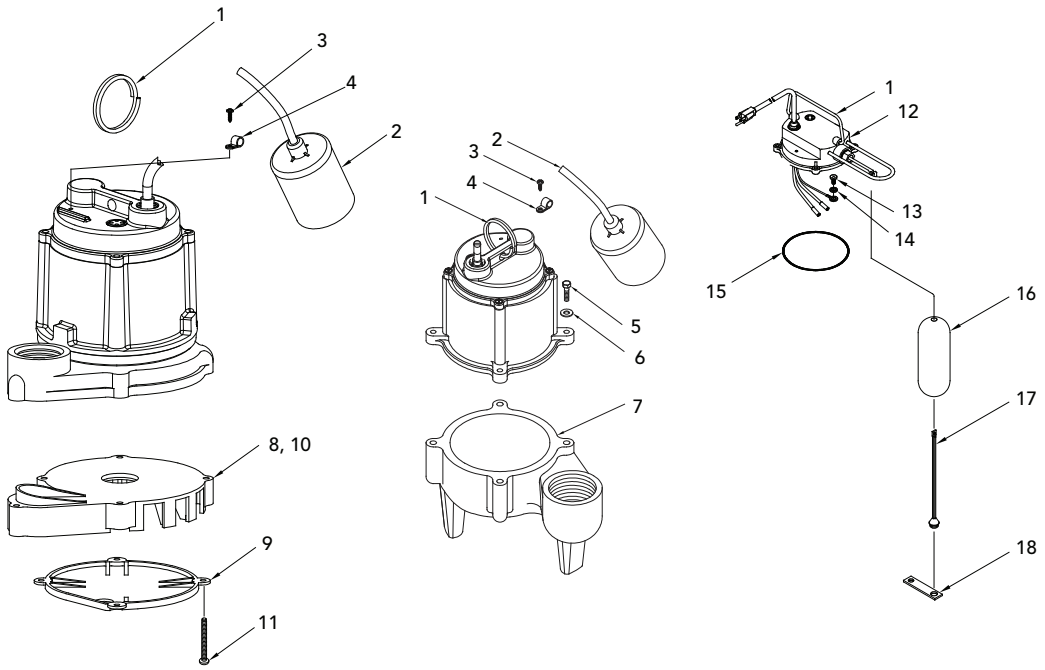

Item No.	Part Number	Part Description	9SN-CIM (509203)	9SN-CIA-RF (509204)	9SN-CIA-RF (509215)	9SN-CIM (509226)	9SN-CIA-SFS (509228)	9EN-CIM (509207)	9EN-CIM (509208)	9EN-CIA-RF (509209)	9EN-CIA-RF (509210)	9EN-CIA-SFS (509260)	9EN-CIA-SFS (509261)	10SN-CIM (511322)	10SN-CIA-RF (511323)	10SN-CIA-RF (511326)	10SN-CIM (511344)	10SN-CIA-SFS (511346)
1	114100	Ring Handle	1	1	1	1		1	1	1	1			1	1	1	1	
1	108101	Handle					1					1	1					1
2	950475	Remote Float Switch 115V, 20FT		1	1					1					1	1		
2	950476	Remote Float Switch 115V, 30FT									1							
3	902516	Screw, Tapping #10-24 X 1/2"		1	1					1	1				1	1		
4	927427	Loop Clamp		1	1					1	1				1	1		
5	915907	Bolt, Hex Head	4	4	4	4	4							4	4	4	4	4
6	921103	Washer, Lock	4	4	4	4	4							4	4	4	4	4
7	111415	Volute, 2" Discharge (Blue)	1	1			1											
7	111236	Volute, 2" Discharge (Black)												1	1			1
7	111540	Volute, 3" Discharge (Blue)			1	1												
7	111541	Volute, 3" Discharge (Black)														1	1	
8	109460	Volute Gasket						1	1	1	1	1	1					
9	109153	Plate, Screen Base						1	1	1	1	1	1					
10	109420	Base Screen						1	1	1	1	1	1					
11	909024	Screw/Washer, 10-24 X1.46						5	5	5	5	5	5					
12	106406	Cover Assembly 115V, 20FT, Automatic					1					1						1
12	106993	Cover Assembly 115V, 30FT, Automatic											1					
13	902437	Screw/Tapping 8-32 X 1/4					1					1	1					1
14	921059	#8 Lock Washer					1					1	1					1
15	928002	Seal Ring,Nitrile, 4.718 I.D. X .078 Wall					1					1	1					1
16	106362	Float					1					1	1					1
17	106355	Float Rod					1					1	1					1
18	106354	Strap					1					1	1					1

SEWAGE & EFFLUENT 2 YEAR WARRANTY STATEMENT

LIMITED WARRANTY

THIS WARRANTY SETS FORTH THE COMPANY'S SOLE OBLIGATION AND PURCHASER'S EXCLUSIVE REMEDY FOR DEFECTIVE PRODUCT.

Franklin Electric Company, Inc. and its subsidiaries (hereafter "the Company") warrants that the products accompanied by this warranty are free from defects in materials or workmanship of the Company that exist at the time of sale by the Company and which occur or exist within the applicable warranty period. Any distributor, sub-distributor, recipient, end-user and/or consumer agrees that by accepting the receipt of the products, the distributor, sub-distributor, recipient, end user and/or consumer expressly agrees to be bound by the terms of the warranty set forth herein.

I. Applicable Warranty Period

The products accompanied by this warranty shall be covered by this Limited Warranty for a period of 24 months from the date of original purchase by the consumer. In the absence of suitable proof of purchase date, the warranty period of this product will begin to run on the product's date of manufacture.

II. Instructions Applicable to this Limited Warranty

1. Consumers wishing to submit a warranty claim must return the products accompanied by this warranty to the point of purchase for warranty consideration.
2. Upon discovery of a defect, any personal injury, property damage or any other type of resulting damage, if applicable, shall be reasonably mitigated to the extent possible.
3. At its discretion, the Company may inspect products either at its facilities or in the field, and after determination of a warranty claim, will, at its option, repair or replace defective parts. Repaired or replaced parts will be returned freight prepaid by the Company.
4. This warranty policy does not cover any labor or shipping charges. The Company shall not be liable for any costs or charges attributable to any product testing, maintenance, installation, repair or removal, or for any tools, supplies, or equipment needed to install, repair, or remove any product.

III. Limitations Applicable to this Limited Warranty

THIS WARRANTY DOES NOT APPLY TO ANY OF THE FOLLOWING:

1. Any product that is not installed, applied, maintained and used in accordance with the Company's published instructions, applicable codes, applicable ordinances and or with generally accepted industry standards.
2. Any product that has been subject to misuse, misapplication, neglect, alteration, accident, abuse, tampering, acts of God (including lightning), acts of terrorism, acts of war, fire, improper storage or installation, improper use, improper maintenance or repair, damage or casualty, or to an excess of the recommended maximums as set forth in the product instructions.
3. Any product that is operated with any accessory, equipment, component, or part not specifically approved by the Company.
4. Use of replacement parts not sold by the Company, the unauthorized addition of non-Company products to other Company products, and the unauthorized alteration of Company products.
5. Products damaged by normal wear and tear, normal maintenance services and the parts used in connection with such service, or any other conditions beyond the control of the Company.
6. Any product that has been used for purposes other than those for which it was designed and manufactured.
7. Any use of the product where installation instructions and/or instructions for use were not followed.
8. Products connected to voltage other than indicated on nameplate.
9. Products where the pump was exposed to any of the following: sand, gravel, cement, grease, plaster, mud, tar, hydrocarbons, hydrocarbon derivatives (oil, gasoline, solvents, etc.) or other abrasive or corrosive substances.
10. Products in which the pump has been used for pumping of liquids above 140 °F.
11. Products in which the pump was allowed to operate dry (fluid supply cut off).
12. Products in which the sealed motor housing has been opened or the product has been otherwise dismantled by customer.
13. Products in which the cord has been cut to a length of less than three feet.

The Company reserves the right at any time, and from time to time, to make changes in the design and/or improvements upon its product without thereby imposing any obligation upon itself to make corresponding changes or improvements in or upon its products already manufactured and/or previously sold. The Company further reserves the right to substitute parts or components of substantially equal quality in any warranty service required by operation of this Limited Warranty.

This written Limited Warranty is the entire warranty authorized and offered by the Company. There are no warranties or representations beyond those expressed in this document.

THIS WARRANTY AND REMEDY IS IN LIEU OF ALL OTHER WARRANTIES AND REMEDIES INCLUDING WITHOUT LIMITATION, WARRANTIES OF MERCHANTABILITY AND/OR FITNESS FOR A PARTICULAR PURPOSE, WHICH ARE HEREBY SPECIFICALLY DISCLAIMED AND EXPRESSLY EXCLUDED. CORRECTION OF NON-CONFORMITIES, IN THE MANNER AND FOR THE PERIOD OF TIME AS SET FORTH ABOVE, SHALL CONSTITUTE FULFILLMENT OF ALL LIABILITY OF THE COMPANY TO THE PURCHASER WHETHER BASED ON CONTRACT, NEGLIGENCE, OR OTHERWISE.

THE COMPANY SHALL NOT BE LIABLE FOR INCIDENTAL, CONSEQUENTIAL OR SPECIAL DAMAGES SUCH AS, BUT NOT LIMITED TO:

DAMAGE TO OR LOSS OF OTHER PROPERTY OR EQUIPMENT, LOSS OF USE OF EQUIPMENT, FACILITIES OR SERVICE, LOSS OF PROFIT OR SALES, COST OF PURCHASES OR REPLACEMENT GOODS, CLAIMS OF CUSTOMERS OF THE PURCHASER, FAILURE TO WARN AND/OR INSTRUCT, LOSS OF OTHER PRODUCTS, OR COSTS OF ENVIRONMENTAL REMEDIATION, OR DIMINUTION IN PROPERTY VALUE. THE REMEDIES OF THE PURCHASER SET FORTH HEREIN ARE EXCLUSIVE, AND THE LIABILITY OF THE COMPANY SHALL

NOT, EXCEPT AS EXPRESSLY PROVIDED HEREIN, EXCEED THE PRICE OF THE PRODUCTS UPON WHICH SUCH LIABILITY IS BASED. DAMAGES AS SET FORTH IN THIS PARAGRAPH SHALL BE REASONABLY MITIGATED TO THE EXTENT POSSIBLE. THIS PARAGRAPH SHALL ALSO APPLY TO ALL DAMAGES RESULTING FROM CONDITIONS SET FORTH IN SECTION III ABOVE AND (1) DEFECTS IN PRODUCT PROTOTYPES OR REPLACEMENT PART PROTOTYPES THAT HAVE NOT BEEN PUT INTO PRODUCTION, CIRCULATED AND SOLD BY THE COMPANY, AND/OR (2) DEFECTS THAT WERE NOT FOUND AT THE TIME OF SALE DUE TO SCIENTIFIC AND TECHNOLOGICAL REASONS.

This Limited Warranty gives you specific legal rights. You may have other rights, which vary according to the applicable laws and regulations. Where any term of this warranty is prohibited by such laws, it shall be null and void, but the remainder of this warranty shall remain in full force and effect.

DISCLAIMER: Any oral statements about the product made by the seller, the Company, the representatives or any other parties, do not constitute warranties, shall not be relied upon by the user, and are not part of the contract for sale. Seller's and the Company's only obligation, and buyer's only remedy, shall be the replacement and/or repair by the Company of the product as described above. Before using, the user shall determine the suitability of the product for his intended use, and user assumes all risk and liability whatsoever in connection therewith.

For parts or repair, please contact 1.888.572.9933
For technical assistance, please contact 1.888.956.0000

Pour des parties ou la réparation,
entrez s'il vous plaît en contact 1.888.572.9933
Pour l'aide technique, entrez s'il vous plaît en contact 1.888.956.0000

Para partes o la reparación,
por favor póngase en contacto 1.888.572.9933
Para la ayuda técnica, por favor póngase en contacto 1.888.956.0000

www.LittleGiantPump.com
CustomerService-WTS@fele.com

Form 998708 - 07/2011

©2011 Franklin Electric Co., Inc.
Little Giant® is a registered trademark of Franklin Electric Co., Inc.