SAVE THESE INSTRUCTIONS

ProLine™ By PONDMASTER®

PRO 1000, 2000 & 3000 WATERFALL

CARE AND OPERATING INSTRUCTIONS

MODELS with 8 ” Spillway	**UPC#**
Pro1000 Waterfall Box	02477
Pro1000 BioMatrix Filter & Falls	02478
Pro1000 Filter & Falls with Debris Filter	02479
MODELS with 11 1/4” Spillway	
Pro 2000 Waterfall Box	02467
Pro 2000 BioMatrix Filter & Falls	02468
Pro 2000 Filter & Falls with Debris Filter	02469
MODELS with 16”Spillway	
Pro3000 Waterfall Box	02481
Pro3000 BioMatrix Filter & Falls	02480
Pro3000 Filter & Falls with Debris Filter	02482

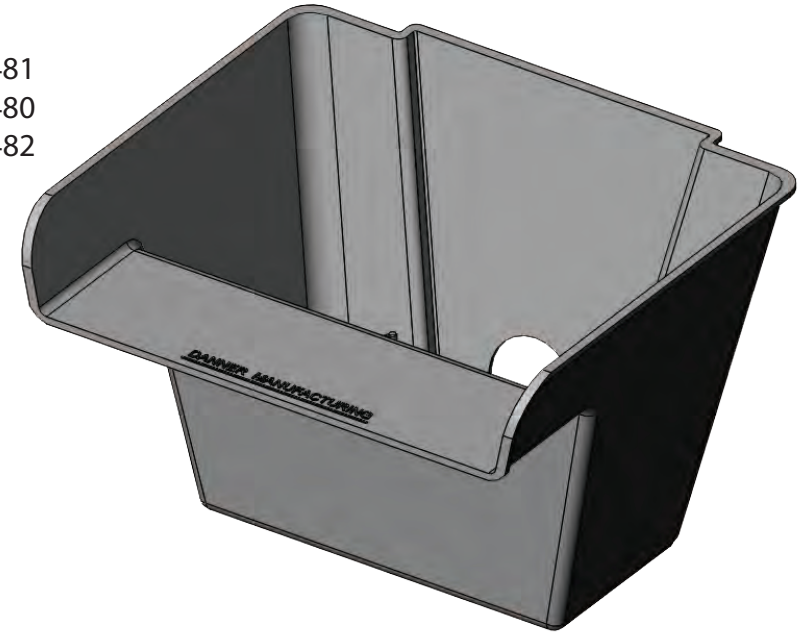

ITEM #02481
SHOWN

ZG105 revE 5/17

WARNING! PONDS ARE DANGEROUS TO SMALL CHILDREN!
NEVER LEAVE CHILDREN UNSUPERVISED NEAR A POND.

1. FEATURES

Thank you for purchasing your new Pro Series Waterfall. You now own one of the most versatile waterfall units ever designed. It has a number of features that set it apart from the rest:

(1) Waterfall Box with compact capacity for minimal turbulence and room for biological filtration media
(2) Stepped Barb fitting with diverter (Models 1000 & 2000 only)
(3) Biological filtration models feature either polyester Debris Filter Pads or BioMatrix biological filter media in a convenient open mesh media bag to biologically treat your pond
(4a) 2" Bulkhead Fitting Assembly (Model 3000)
(4b) 2" Barbed Fitting (Model 3000)

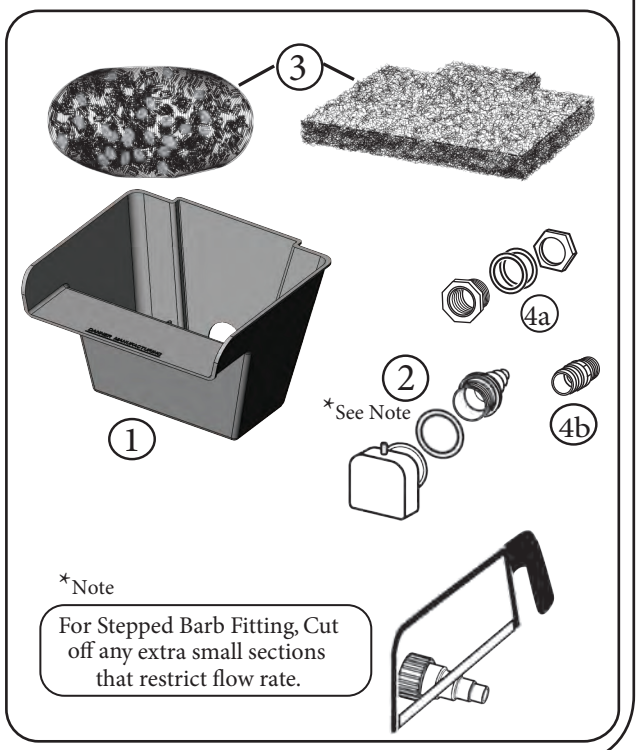

- All Pro Series Waterfall units are designed to be strong enough to resist collapsing from the pressure of soil and water around them, even when empty.
- They easily support the weight of stones placed on the upper rim to conceal it.
- Large capacity of the Waterfall Box means it will hold more media, providing greater surface area for bacterial colonization, and therefore more filtering capacity.

2. HOW BIOLOGICAL FILTRATION WORKS in the Pro Series BioMatrix Filter and Falls:

Fish extract nutrition from what they eat and excrete what's left back into the water column in the form of ammonia, which can be very toxic even at low concentrations. Your Biological Filter and Falls is specifically designed to maximize the natural processes that remove ammonia from the water. Water pumped into the Biological Filter and Falls brings the dissolved wastes into contact with bacterial colonies on the many surfaces of the filter media. These colonies digest, or metabolize, the ammonia. Some types of bacteria turn it into nitrites; others take the still toxic nitrites and dissolved oxygen and turn them into less toxic nitrates, a natural fertilizer that is easily taken up by plants. When the proper balance of fish, plants and aeration is reached, your Biological Filter and Falls will remove all of the ammonia and nitrite in your pond and since the bacteria work best when undisturbed, you don't have to clean it for the entire season. Even better, your Biological Filter and Falls makes it easy to find that balance by helping to aerate the water as it flows over the waterfall lip and by providing a great spot to place floating plants – right in the top of the Biological Filter and Falls itself. The Pro1000 Biological Filter and Falls can handle water flows from 250 to 950 gallons per hour, the Pro2000 Biological Filter and Falls can handle water flows from 950 to 2000 gallons per hour, & the Pro3000 Biological Filter and Falls can handle 1000 to 3000 gallons per hour so they work with a great variety of pump sizes.

ELECTRICAL PRECAUTIONS

Always use a properly grounded outlet. Do not immerse the plug in water. DO NOT REACH INTO THE WATER TO REMOVE THE PLUG. TURN OFF CIRCUIT FIRST. A "drip loop" in the cords should be used. A "drip loop" is a loop in the cord below the level of the receptacle or plug that prevents water from traveling along the cord. The national Electric Code requires that a ground fault interrupter circuit (GFCI) be installed in every branch circuit supplying the fountain or pond equipment. Your dealer can supply GFCI units. NEVER REMOVE GROUND PIN FROM PLUG.

WARNING: FOR YOUR PROTECTION, ALWAYS UNPLUG THE UNIT FROM ITS POWER SOURCE BEFORE INSTALLING OR SERVICING. DO NOT REACH, REMOVE OR DISASSEMBLE BEFORE YOU DISCONNECT POWER.

3. LOCATION OPTIONS

Your Waterfall box can be placed anywhere around your pond – inside the liner or at the liner perimeter. Most of the time it is placed at the beginning of a stream. The important thing to remember is that all of the water coming out of the filter must stay within the pond liner to avoid water loss. For maximum circulation and aeration, your Waterfall box should be located on the side of the pond farthest from the pump location. The Falls are designed to seal to any flexible EPDM, PVC, or Butyl Rubber liner for leak-free service. Once you have determined the location of the filter, you should decide on the size of the pump that will feed it. You might want a lot of water movement in a rushing stream or powerful waterfall, or you may prefer a quieter flow or gentle trickle. Once you have decided on the effect you wish to achieve, you can choose a suitable pump.

Pro 1000 and Pro 2000 Models

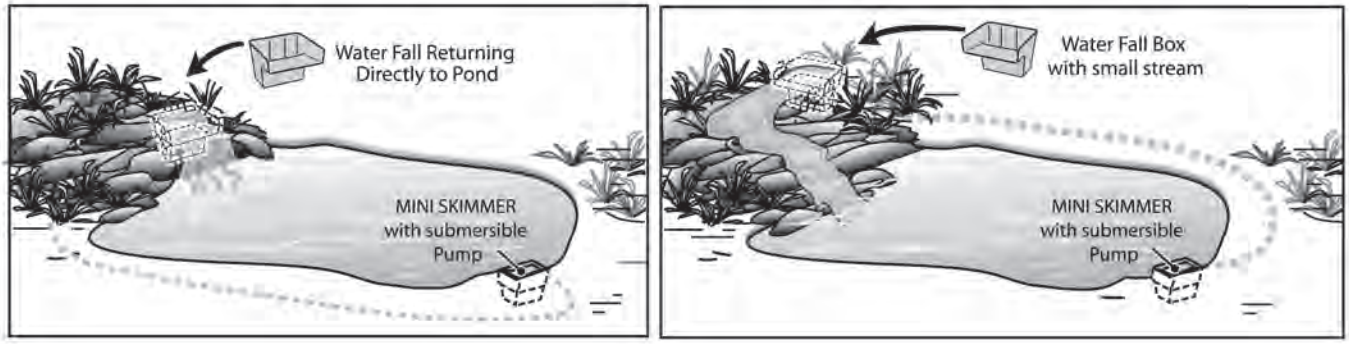

CHOOSING THE CORRECT PUMP

A good rule of thumb for garden ponds from 100 to 2000 gallons is to circulate the entire volume of the pond every 1-2 hours to ensure good circulation while providing enough flow for an aesthetically pleasing waterfall, stream or fountainhead. Your Pro3000 Filter and Falls was therefore designed to perform equally well with pumps of 250 to 2000 GPH capacity.

We recommend our Pondmaster 250, 350, 500, 700, and 950 submersible pumps for smaller ponds under 1000 gallons; our 950, 1200, 1800 and 2000 GPH pumps for greater head heights.

See Pro 1000 and Pro 2000 Pump Chart on next page.

PRO1000 and PRO 2000 PUMP REFERENCE CHART

Pump	Item #	Gallons Per Hour						Shutoff-Head	Watts Range*
		@ 1'	@ 3'	@ 5'	@ 7'	@ 10'	@ 15'		
Model 2	02522	280	170	65	-	-	-	6'5"	21 - 11
Model 3	02523	420	325	235	140	-	-	10'4"	37 - 16
Model 5	02525	525	400	300	200	-	-	10'6"	49 - 22
Model 7	02517	655	565	450	325	110	-	11'8"	60 - 32
Model 9.5	02720	1010	900	770	650	475	-	13'7"	93 - 42
Model 12	02722	1190	1065	900	795	570	-	13'7"	110 - 38
Model 18	02728	1300	1170	1040	925	775	470	16'6"	150 - 40
WFP 2000	02650	1836	1374	1086	942	654	-	13'2"	140 - 75
HY-Drive 1900	20210	1710	1325	870	555	-	-	10'0"	95 - 90

* Watts decrease as pump loads increase during normal usage. Examples show range from 0' to shut-off; watts continue to decrease as flow decreases.

PRO SERIES
FILTER and FALLS MEDIA SET-UP

If your waterfall includes filter media see the following steps.

For those models with Debris Filters:
Flex the Debris Filter pad as shown and press into filter box. If after time the Debris filter is lifted by the water flow, either rinse and replace Debris Filter or replace with a new one.*

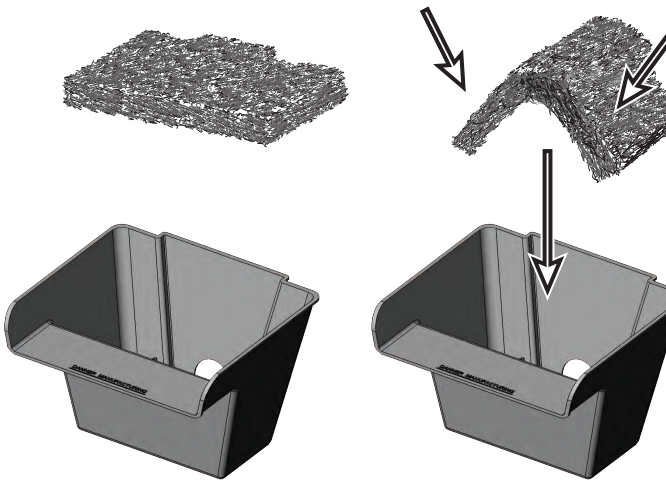

For those models with BioMatrix Media:
Simply place the media bag into the filter box. *
DO NOT OPEN THE MEDIA BAG.

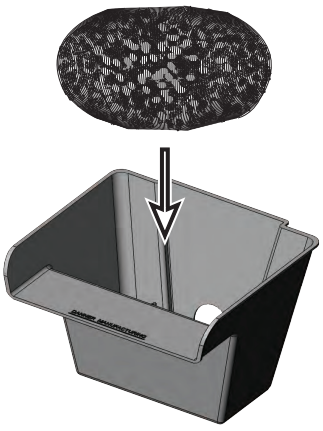

* Note that a flat stone can be placed on top of either style filter media to keep it down.

Pro 3000 Model

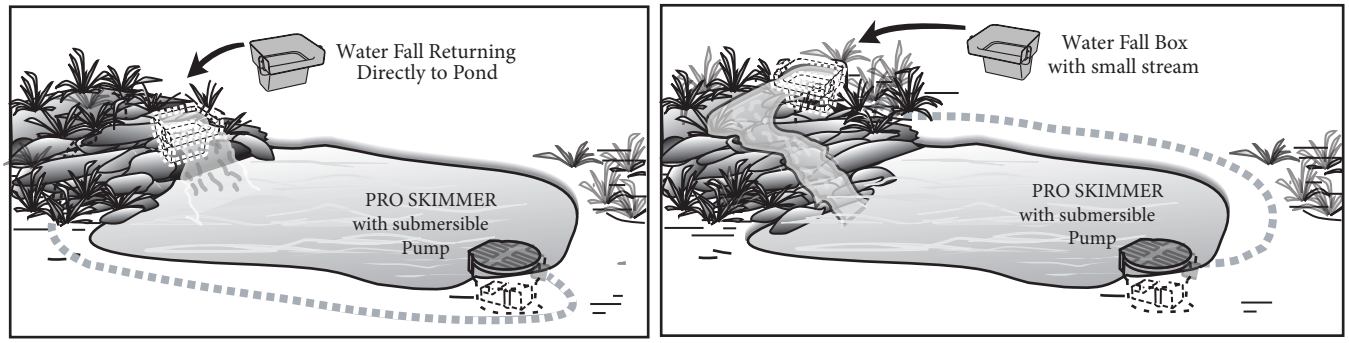

CHOOSING THE CORRECT PUMP

A good rule of thumb for garden ponds from 1000 to 3000 gallons is to circulate the entire volume of the pond every 1-2 hours to ensure good circulation while providing enough flow for an esthetically pleasing waterfall, stream or fountainhead. Your Pro3000 Filter and Falls was therefore designed to perform equally well with pumps of 1000 to 3000 GPH capacity.

We recommend our Pondmaster 1200 and 1800 submersible pumps for smaller ponds under 1000 gallons; our 2000 and 3000 magnetic drive pumps and Pro 2100 and 2600 pumps for greater head heights; and for even greater flows our Pro 3200. **See Pro 3000 Pump Chart Below**

PRO 3000 PUMP REFERENCE CHART

Name	Model #	GPH @ 0'	GPH @ 1'	GPH @ 5'	GPH @ 10'	Shutoff	Wattage Range*
Model 12	#02722	1200	970	800	580	13'7"	110 - 38
Model 18	#02728	1500	1500	1100	875	16'6"	150 -40
HY-Drive 1600	#02663	1800	1700	1400	1000	17'0"	125 - 110
HY-Drive 2100	#02665	2125	2075	1750	1300	22'5"	192 - 142
HY-Drive 2600	#02667	2700	2550	2450	1975	26'5"	275 - 220
HY-Drive 3200	#02680	3500	3300	2050	650	12'0"	210 - 194

*Watts decrease as pump loads increase during normal usage. Examples show range from 0' to shut-off; watts continue to decrease as flow decreases

PLUMBING

Note that it is often easiest to plumb the flexible hose to the Waterfall Box and set BOTH in position BEFORE excavating the pond. The soil from the pond excavation might be then used to cover the hose and backfill around the Waterfall Box, saving time and effort.
NOTE: Some units are shipped with Bulkhead Fitting assembled. If your unit requires assembly follow the steps:
1) The Nut is a left hand thread - turn counterclockwise to tighten.
2) The nut has two different sized collars on its faces. Install the nut onto the bulkhead fitting with the smaller collar coming in contact with rigid washer (4).
3) Wrap threads of the 2" fitting with teflon tape before screwing into Bulkhead Fitting.

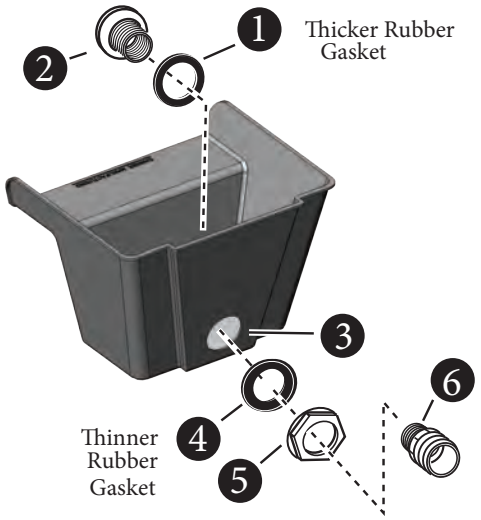

MAINTENANCE
The Pro Series Waterfalls require no maintenance other than periodically changing or refreshing the filter media in the models that include media.

FOR MODELS THAT INCLUDE FILTER MEDIA
The Pro Series Watertfall is biological filter; it depends on an active colony of aerobic or oxygenating bacteria to remove ammonia from the water column. The colony will need 4 to 6 weeks to grow initially. After the bacteria have colonized the media, avoid rinsing the media in chlorinated water. Typical household tap water contains enough chlorine to wipe out the helpful bacterial colonies. Instead, clean the media by immersing the bag of media in bucket or small tub filled with water and briskly shaking to break up and remove some - but not all - of the sludge that builds up. This is typically necessary once at the end of the season. Note that the "dirty" water resulting from cleaning the filter media is good fertilizer for most outdoor plants.

DEBRIS FILTER PADS
The filter pads provided in the 02479, 02469, and 02482 Kits work as debris filters and to a lesser extent biological filter. The procedure above on how to clean the bagged filter media also applies to the debris filter pads. Note that depending on your particular pond conditions, cleaning may be needed more frequently. The Debris filter pad (Item # 12453 for Pro 1000, Item # 12457 for Pro 2000, and Item #12459 for Pro 3000) can be replaced as needed.

WINTERIZING
The Pro Series Waterfalls can withstand winter conditions unless you live where winters are extremely harsh. If the falls are turned off during the winter months, be sure to empty the falls and any tubing that is above ground since standing water will form ice that can split valves and rigid fittings.

REPLACEMENT PARTS

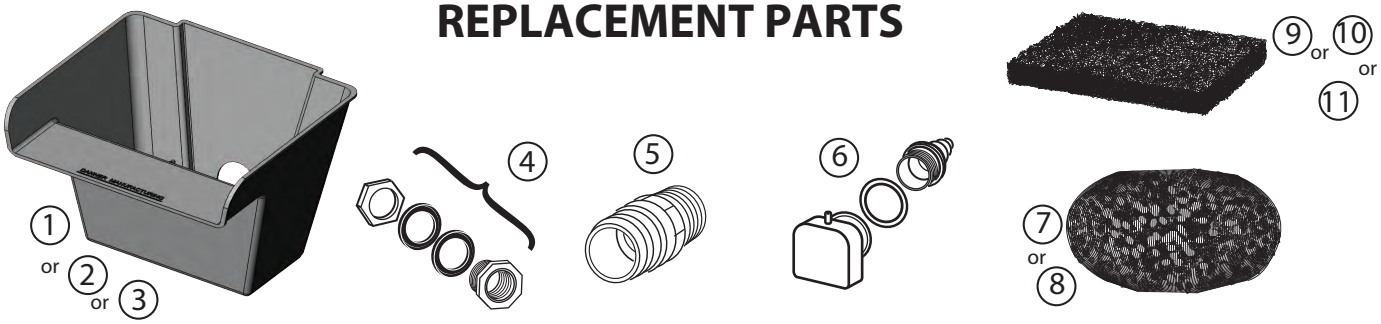

"✓"s designate parts included with each model	Model 1000			Model 2000			Model 3000		
PART DESCRIPTION	#02477	#02478	#02479	#02467	#02468	#02469	#02480	#02481	#02482
① 3000 Waterfall Box							✓	✓	✓
② 2000 Waterfall Box				✓	✓	✓			
③ 1000 Waterfall Box	✓	✓	✓						
④ Bulkhead Fitting #12470							✓	✓	✓
⑤ 2" X 2" MPT Barbed Fitting #12488							✓	✓	✓
⑥ Stepped Barb/Diverter #12482	✓	✓	✓	✓	✓	✓			
⑦ BioMatrix Media Bag #12445		✓			✓				
⑧ BioMatrix Media Bag #12455							✓		
⑨ Debris Filter Pad #12453			✓						
⑩ Debris Filter Pad #12457						✓			
⑪ Debris Filter Pad #12459									✓

LIMITED ONE YEAR WARRANTY
E.G.Danner Manufacturing, Inc will repair or replace any Pro Series Waterfalls found to be defective within one year of original purchase. Wearable items are not covered by this warranty. For warranty repair, return only the part that is defective to our factory. Please include a dated proof of purchase and $10.00 for postage and handling. Damages or injuries resulting from negligence or misuse of the product are not covered by this warranty. This warranty gives you specific legal rights. You may have other rights which vary from state to state.

ZG105 revE 5/17

DANNER MFG. INC. ● 160 Oval Drive, Islandia, NY 11749-1489 (631) 234-5261
Visit our website at www.Dannermfg.com